TURNGATE TGB410/ TGD410

FULL HEIGHT TURNSTILES – TURNGATE MOBILE

FB MECASYSTEM

PROFESSIONAL ACCESS CONTROL

FBMECASYSTEM
Control and security of access



Full Height Turnstiles
TURNGATE TGB410/ TGD410

TURNGATE turnstiles are engineered to deliver **autonomous pedestrian access control** for public or private spaces requiring a high level of security — including sensitive sites, construction sites, and large-scale events.

Rigidity & Robustness

Built for durability indoors and outdoors, the TGB410 features a **3-leg structure** with a central rotor base. Low energy consumption and high resistance make it ideal for moderate to very high security zones.

Reception, Autonomy & Security

An effective alternative when no reception or security staff is present. Enables **real-time people counting** and occupancy rate management.

Available finishes: Stainless steel AISI 400 / 304 / 316L, painted metal, galvanized steel — in RAL color, brushed, or polished stainless steel.

Advantages

Robust Mechanism

Ultra-robust semi-automatic electromagnetic mechanism with **3-cam drive** and pneumatic brake for smooth, silent operation.

Single-Passage Security

Strict single-passage enforcement with **2-sided LED indicators** — green arrow (authorized) / red cross (prohibited).

Low Energy Use

Only **55W power consumption** with backup battery connection available. Fail-safe on power cut: locked or released.

Universal Integration

Compatible with **all access control systems** — RFID, proximity, biometric, barcode, QR code, coin acceptor, and more.

Options include: mobile platform, heating/cooling for extreme climates, alarm on top cover, OEM/logo application, canopy, roof, lighting, intercom integration, and additional equipment space.

Size drawing of the TURNGATE TGB410

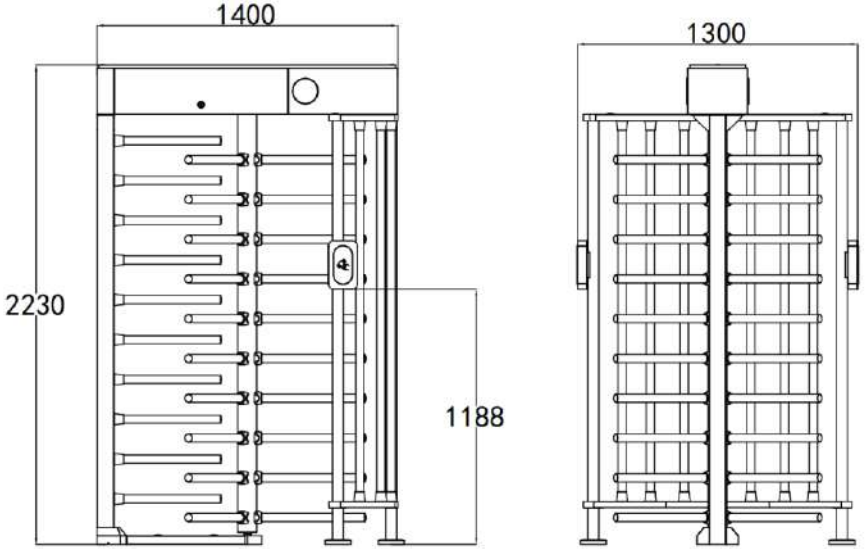

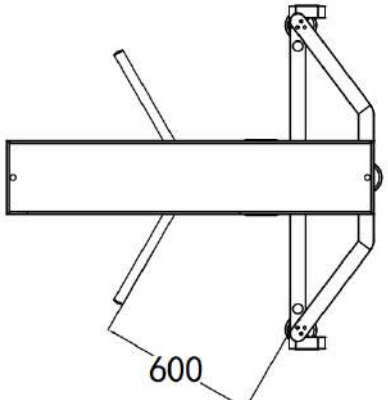

Overall Height

2230 mm

Overall Width

1400 mm

Overall Depth

1300 mm

Passage Width

600 mm (arms)

All dimensions are standard. Custom dimensions available on request. Installation template and anchoring kit included.

Standard Specifications TURNGATE TGB 410

Size （L*W*H)	1400*1300*2230mm
Pass width	600mm
Power	50W
Material	Body δ=1.2mm / fence ϕ=1.0mm SUS304
Movement	molding full-height turnstile movement
Sensor	Limited sensor
Indicator Light	Dynamic indicator light
Drive Unit	Anti burn solenoid
Power Supply	24V 150W
Control Unit	Main board
Communication Interface	Dry contact & RS485
Pass rate	35-50 persons/minute
Temperature	-20℃~+70℃
Humidity	≤90% No condensation
IP	IP4X
Environment	Indoor and outdoor



Size drawing of the TURNGATE TGD 410

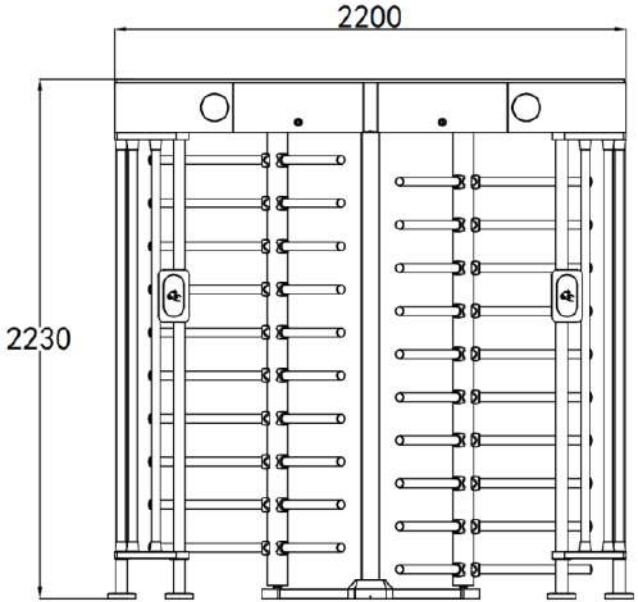

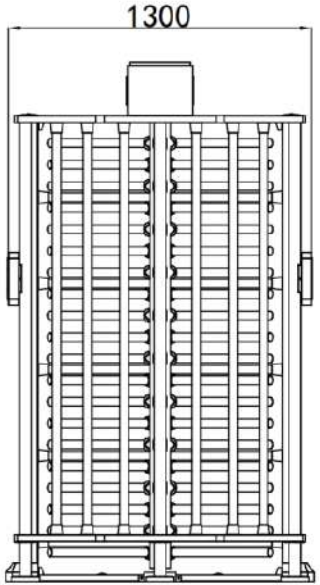

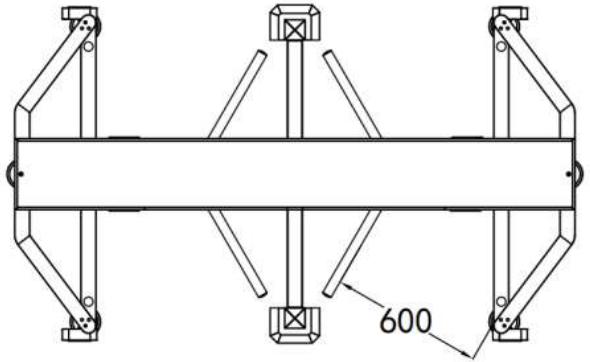

Standard Specifications TURNGATE TGD 410

Size （L*W*H)	2200*1300*2230mm
Pass width	600mm
Power	50W
Material	Body δ=1.2mm / fence ϕ=1.0mm SUS304
Movement	molding full-height turnstile movement
Sensor	Limited sensor
Indicator Light	Dynamic indicator light
Drive Unit	Anti burn solenoid
Power Supply	24V 150W
Control Unit	Main board
Communication Interface	Dry contact & RS485
Pass rate	35-50 persons/minute
Temperature	-20℃~+70℃
Humidity	≤90% No condensation
IP	IP4X
Environment	Indoor and outdoor



FBMECASYSTEM
Control and security of access

Available Equipment & Finishes

Equipment Options

- Translucent roof with micro gutter
- LED lighting strip
- Side and upper barred barriers & partitions
- Installation template and anchoring kit
- Mobile platform

Technology Integrations

- RFID / Proximity / Biometric readers
- Barcode & QR-code reader
- Coin acceptor, badge collector, ticket printer
- Passage counter (integrated or remote)
- Camera integration
- Heating / cooling for extreme climates
- OEM / Logo application

Full Customization Available: Structural, aesthetic, and technological personalization on request — tailored to your project's environment and security requirements.



Finishes & Material Variations



Brushed Stainless Steel

AISI 304 or 316L — ideal for demanding outdoor environments with superior corrosion resistance.



Polished Stainless Steel

Premium mirror finish for high-end public spaces, transport hubs, and corporate buildings.



RAL Painted Metal

Wide range of RAL colors available on galvanized or painted steel for brand-consistent installations.

FBMECASYSTEM
Control and security of access

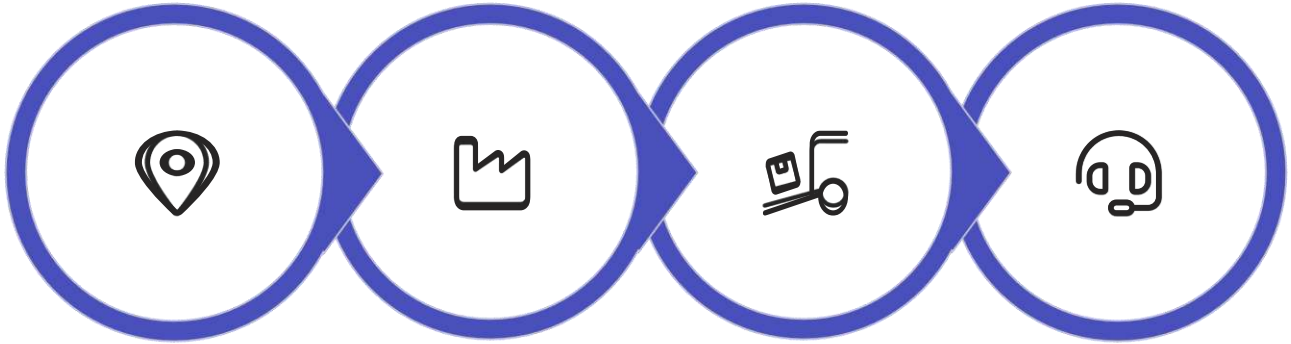

FB Mecasystem supports every project from initial site assessment through manufacturing, installation, and long-term maintenance — ensuring optimal performance throughout the product lifecycle.

We Welcome You to Visit Us!

Our team is available to answer your questions and guide you toward the best access control solution for your project.

📞 Phone

+33 (0)1 89 16 71 34

📍 Address

16 Rue du Clos Hubert
28320 Gallardon, France

🌐 Website

fbmecasystem.com

✉️ Email

commercial@fbmecasystem.com

FBM ECASYSTEM
Control and security of access

